REV	LOCATIONS	DESCRIPTION	DATE	REVISER	APPD

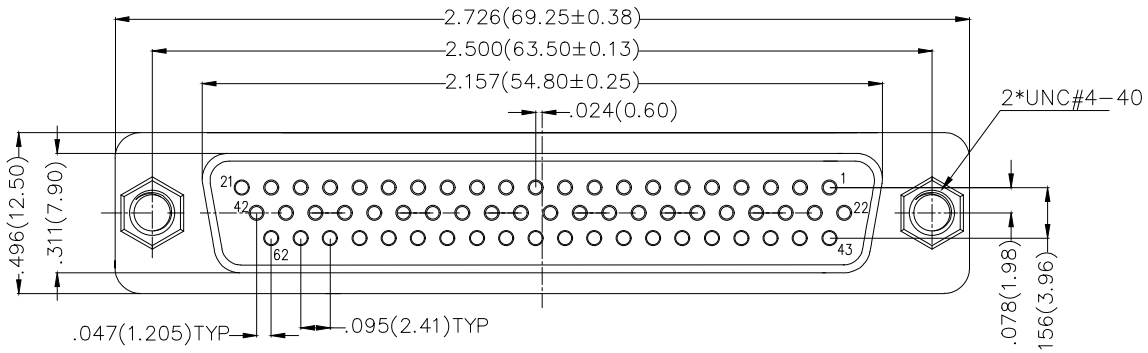

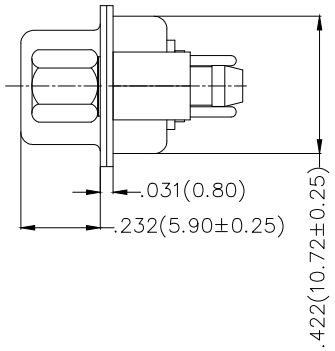

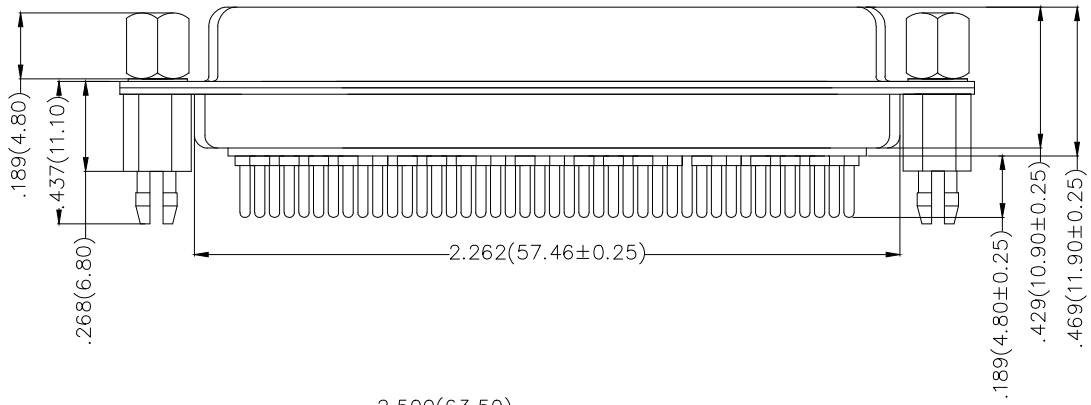

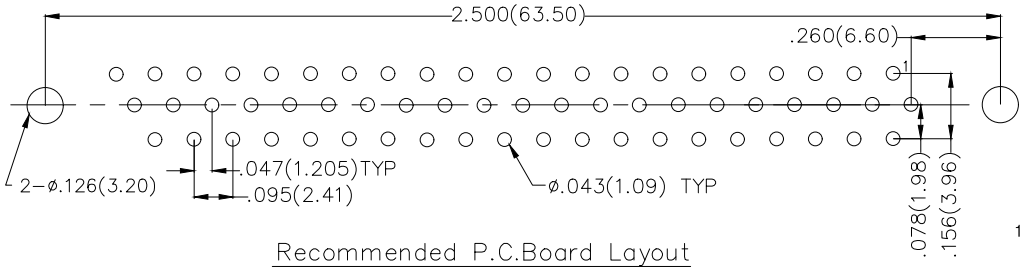

Recommended P.C.Board Layout

Ordering Information

FDM	62	15	—	F0	D	S	1	XX	XX	X
1	2	3		4	5	6	7	8	9	10

1	Category	2	Circuits	3	Distinction No.	4	Type	5	Assembly Layout
	FDM-Machined pin D-SUB connector		62		15		F0-Female		D-DIP

6	Entry Angle	7	Plating	8	Thickness of Plating	9	Color-Resin	10	Packaging
	S-180° Vertical		1-Gold Plated		01-1μ" 03-03μ"		W1-White K6-Black		K-Tray L-Tube

Materials And Finish
Shell: Steel Material,Front Nickel Plated
Back Shell Tin Plated
Insulator: PBT Thermoplastic,UL 94V-0 ,Colour: Black
Contact Material: Brass /Gold Plated
Electrical Characteristic
Contact Current Rating: 5A
Contact Resistance : 30mΩ Max
Dielectric Withstanding Voltage : 1000V AC r.m.s Min
Insulation Resistance: 5000 Megaohms Min.
Temperature Range-Operating: -55°C ~ +105°C

THIRD ANGLE PROJECTION	GENERAL TOLERANCES (UNLESS SPECIFIED)		APPROVE BY FRANK	DATE 23/JUL/16	PART NO. FDM6215-F0DS1XXXXX / ITEM NO. FDM6215
DESIGN UNITS Inch (metric)	X.±.012(0.30)	X.°±5°	CHECKED BY JACOB	DATE 23/JUL/16	TITLE Machined pin D-SUB connector 180° Vertical Female
	X.X±.008(0.20)	.X°±2°			
SCALE 5:1 / SIZE A4	X.XX±.006(0.15)	.XX°±1°	DRAWN BY CHERRY	DATE 23/JUL/16	REV 0 / SHEET NO. 1/1
	X.XXX±.004(0.10)	.XXX°±0.5°			

3K-KAMING ®

THIS DRAWING CONTAINS INFORMATION THAT IS PROPRIETARY TO DONG GUAN LANG LUN(3K-KAMING) ELECTRONIC PRODUCTS CO.,LTD. AND SHOULD NOT BE USED WITHOUT WRITTEN PERMISSION

东莞市朗纶电子制品有限公司 工程部
东莞市朗纶电子制品有限公司 受控文件

REV	LOCATIONS	DESCRIPTION	DATE	REVISER	APPD

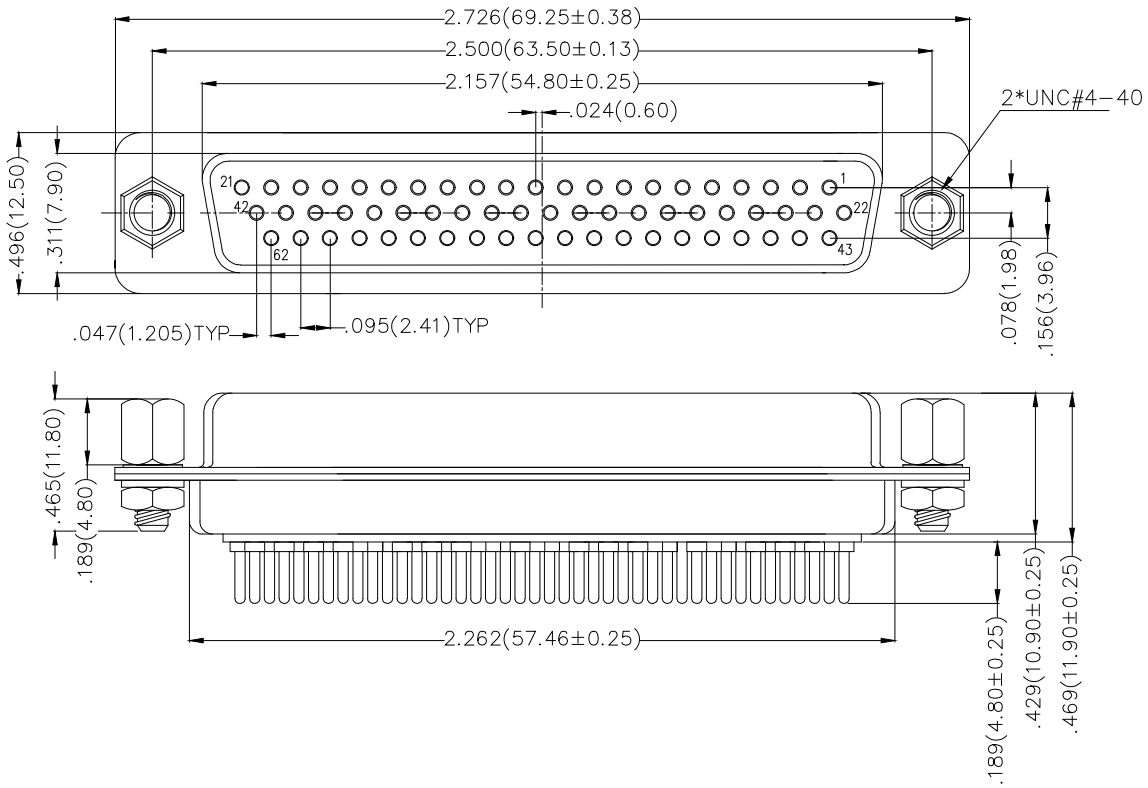

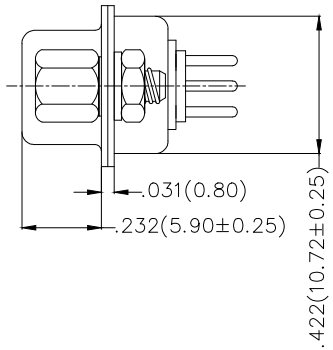

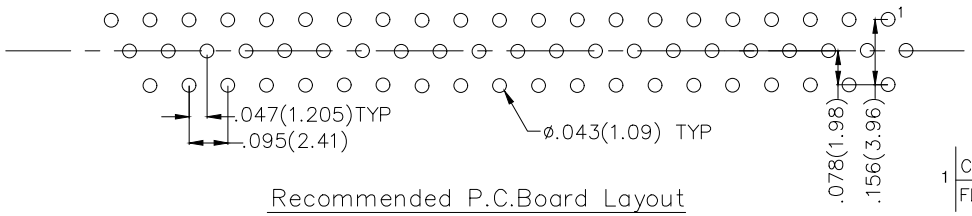

Recommended P.C.Board Layout

Ordering Information

FDM	62	15	—	F0	D	S	1	XX	XX	X	A
1	2	3		4	5	6	7	8	9	10	11

1	Category	2	Circuits	3	Distinction No.	4	Type	5	Assembly Layout		
	FDM–Machined pin D–SUB connector		62		15		F0–Female		D–DIP		
6	Entry Angle	7	Plating	8	Thickness of Plating	9	Color–Resin	10	Packaging	11	Distinction Type
	S–180° Vertical		1–Gold Plated		01–1μ" 03–03μ"		W1–White K6–Black		K–Tray L–Tube		A–Type A

Materials And Finish
Shell: Steel Material,Front Nickel Plated
Back Shell Tin Plated
Insulator: PBT Thermoplastic,UL 94V–0 ,Colour: Black
Contact Material: Brass /Gold Plated
Electrical Characteristic
Contact Current Rating: 5A
Contact Resistance : 30mΩ Max
Dielectric Withstanding Voltage : 1000V AC r.m.s Min
Insulation Resistance: 5000 Megaohms Min.
Temperature Range–Operating: –55°C ~ +105°C

THIRD ANGLE PROJECTION	GENERAL TOLERANCES (UNLESS SPECIFIED)		APPROVE BY	DATE	PART NO.	ITEM NO.	3K-KAMING
	X.±.012(0.30)	X.°±5°	FRANK	23/JUL/13	FDM6215–F0DS1XXXXXA	FDM6215	
DESIGN UNITS Inch (metric)	X.X±.008(0.20)	.X°±2°	CHECKED BY CHERRY	DATE 23/JUL/13	TITLE Machined pin D–SUB connector 180° Vertical Female		REV 0 / SHEET NO. 1/1
	X.XX±.006(0.15)	.XX°±1°	DRAWN BY	DATE			
SCALE 5:1 / SIZE A4	X.XXX±.004(0.10)	.XXX°±0.5°	JACOB	23/JUL/13			

THIS DRAWING CONTAINS INFORMATION THAT IS PROPRIETARY TO DONG GUAN LANG LUN(3K-KAMING) ELECTRONIC PRODUCTS CO.,LTD. AND SHOULD NOT BE USED WITHOUT WRITTEN PERMISSION

东莞市朗纶电子制品有限公司 工程部

东莞市朗纶电子制品有限公司 受控文件

REV	LOCATIONS	DESCRIPTION	DATE	REVISER	APPD

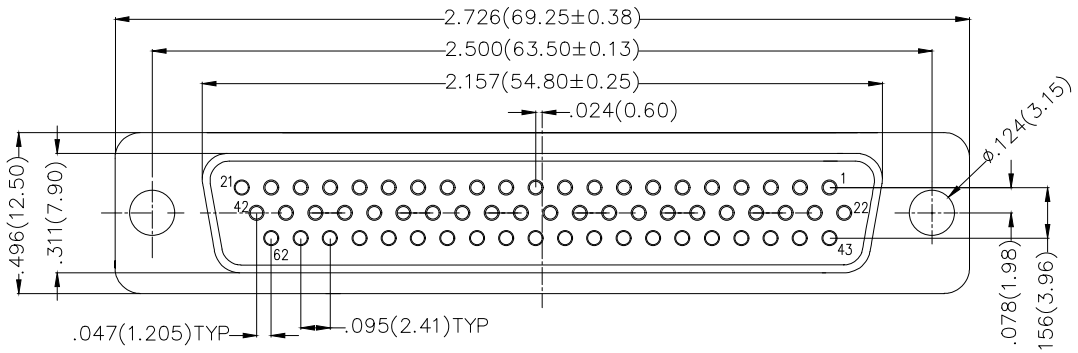

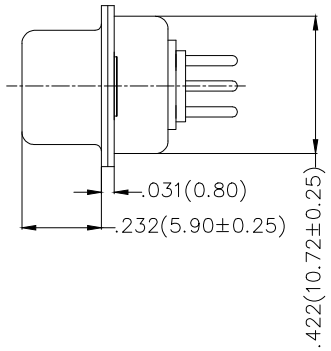

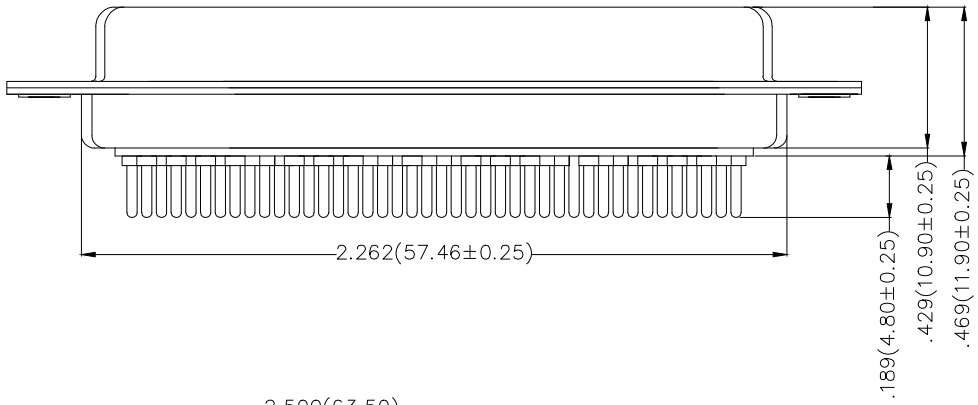

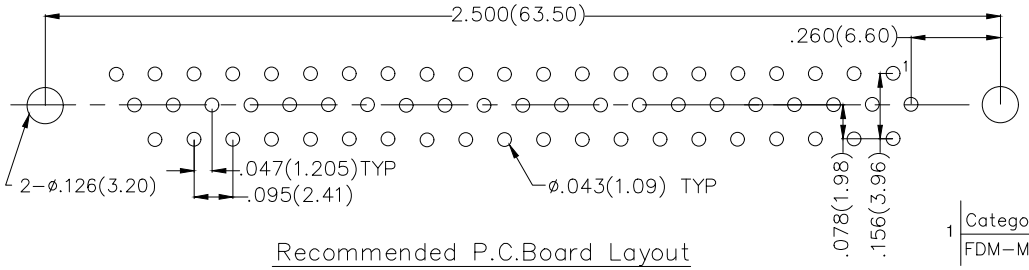

Recommended P.C.Board Layout

Ordering Information

FDM	62	15	—	F0	D	S	1	XX	XX	X	B
1	2	3		4	5	6	7	8	9	10	11

1	Category	2	Circuits	3	Distinction No.	4	Type	5	Assembly Layout		
	FDM–Machined pin D–SUB connector		62		15		F0–Female		D–DIP		

6	Entry Angle	7	Plating	8	Thickness of Plating	9	Color–Resin	10	Packaging	11	Distinction Type
	S–180° Vertical		1–Gold Plated		01–1μ" 03–03μ"		W1–White K6–Black		K–Tray L–Tube		B–Type B

Materials And Finish
Shell: Steel Material,Front Nickel Plated
Back Shell Tin Plated
Insulator: PBT Thermoplastic,UL 94V–0 ,Colour: Black
Contact Material: Brass /Gold Plated
Electrical Characteristic
Contact Current Rating: 5A
Contact Resistance : 30mΩ Max
Dielectric Withstanding Voltage : 1000V AC r.m.s Min
Insulation Resistance: 5000 Megaohms Min.
Temperature Range–Operating: –55°C ~ +105°C

THIRD ANGLE PROJECTION	GENERAL TOLERANCES (UNLESS SPECIFIED)		APPROVE BY	DATE	PART NO.	ITEM NO.	3K-KAMING ®
	X.±.012(0.30)	X.°±5°	FRANK	23/JUL/13	FDM6215–F0DS1XXXXXB	FDM6215	
DESIGN UNITS Inch (metric)	X.X±.008(0.20)	.X°±2°	CHECKED BY CHERRY	DATE 23/JUL/13	TITLE Machined pin D–SUB connector 180° Vertical Female		REV 0 / SHEET NO. 1/1
	X.XX±.006(0.15)	.XX°±1°	DRAWN BY	DATE			
SCALE 5:1 / SIZE A4	X.XXX±.004(0.10)	.XXX°±0.5°	JACOB	23/JUL/13			

THIS DRAWING CONTAINS INFORMATION THAT IS PROPRIETARY TO DONG GUAN LANG LUN(3K-KAMING) ELECTRONIC PRODUCTS CO.,LTD. AND SHOULD NOT BE USED WITHOUT WRITTEN PERMISSION

东莞市朗纶电子制品有限公司 工程部
东莞市朗纶电子制品有限公司 受控文件