REV	LOCATIONS	DESCRIPTION	DATE	REVISER	APPD

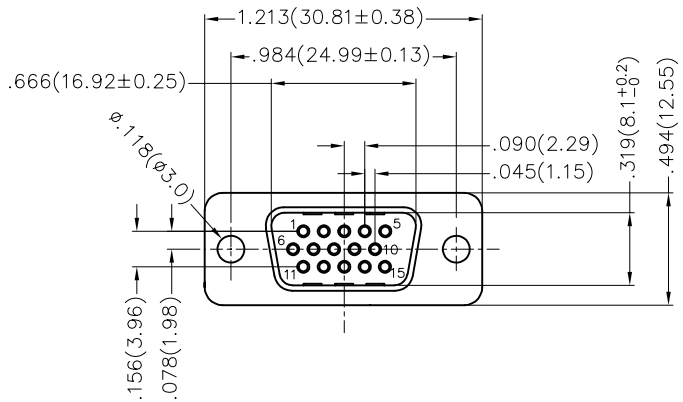

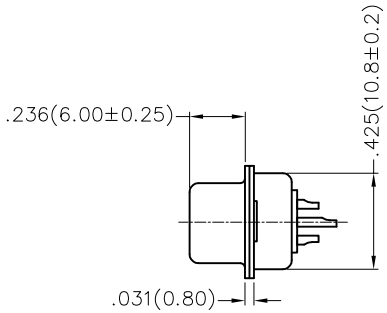

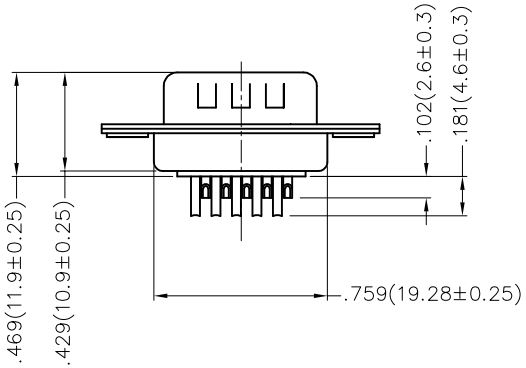

东莞市朗纶电子制品有限公司
工程部

东莞市朗纶电子制品有限公司
受控文件

Ordering Information

FDM	15	11	—	M0	W	S	1	XX	XX	X
1	2	3		4	5	6	7	8	9	10

1	Category	2	Circuits	3	Distinction No.	4	Type	5	Assembly Layout
	FDM–Machined pin D–SUB connector		15		11		M0–Male		W–Welding Type

6	Entry Angle	7	Plating	8	Thickness of Plating	9	Color–Resin	10	Packaging
	S–180° Vertical		1–Gold Plated		01–1μ" 03–3μ" Custom plate available		W1–White K6–Black		K–Tray L–Tube

Materials And Finish
Shell: Spcc Material, Front Nickel Plated 80μ" Min
Back Shell: SPCC, Tin Plated 100μ" Min
Insulator: Glass Filled Thermoplastic, UL 94V–0
Contact Material: Brass /Gold Plated
Electrical Characteristic
Current Rating: 5.0A
Voltage Rating: 300V
Contact Resistance: 30mΩ Max
Dielectric Withstanding Voltage : 1000V AC r.m.s
Insulation Resistance: 5000 MΩ Min.
Temperature Range–Operating: −55°C ~ +105°C

THIRD ANGLE PROJECTION	GENERAL TOLERANCES (UNLESS SPECIFIED)		APPROVE BY	DATE	PART NO.	ITEM NO.	3K-KAMING
	X.±.012(0.30)	X.°±5°	FRANK	23/JUL/13	FDM1511–M0WS1XXXXX	FDM1511–M0	
DESIGN UNITS Inch (metric)	X.X±.008(0.20)	.X°±2°	CHECKED BY CHERRY	DATE 23/JUL/13	TITLE Machined pin D–SUB connector 180° Vertical Male		REV 0 / SHEET NO. 1/1
	X.XX±.006(0.15)	.XX°±1°	DRAWN BY	DATE			
SCALE 5:1 / SIZE A4	X.XXX±.004(0.10)	.XXX°±0.5°	JACOB	23/JUL/13			

THIS DRAWING CONTAINS INFORMATION THAT IS PROPRIETARY TO DONG GUAN LANG LUN(3K-KAMING) ELECTRONIC PRODUCTS CO.,LTD. AND SHOULD NOT BE USED WITHOUT WRITTEN PERMISSION