ALLOWANCE	
UNDER 3	±0.1
3 TO 6	±0.15
6 TO 15	±0.2
15 TO 50	±0.25
50 OVER	±0.3

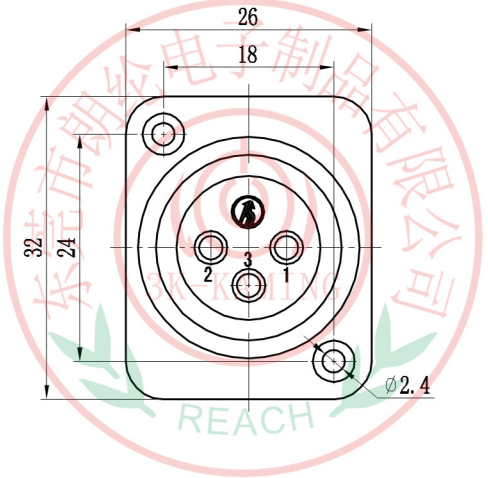

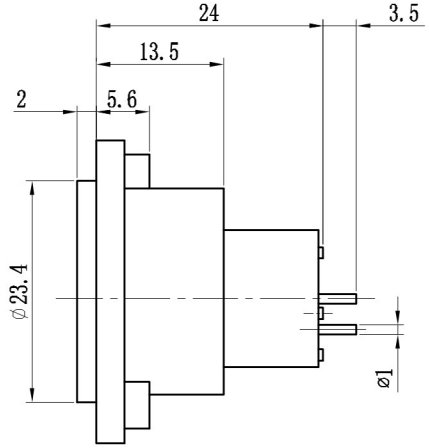

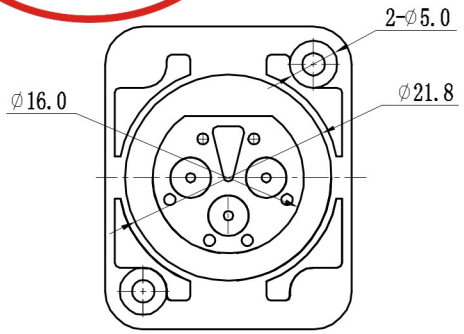

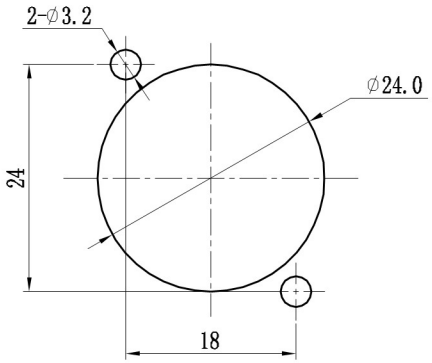

PANEL CUT OUT

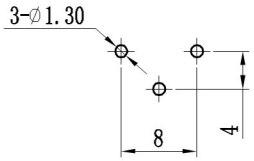

PCB LAYOUT

TOP VIEW

Specifications:
Rating :AC 50V,3A.
Force:5-40N.
Contact resistance:
Less than30mΩ.
Insulation resistance:
Over 1GΩ on DC 500V measured.
Voltage withstand :
AC 1000V,For 1 minute.

MODEL NO: SPF-19N	ALLOWANCE:	DRAWN BY:
TYPE: SP SOCKET	UNIT: mm	CHECKED BY:
MATERIAL NO:	SCALE:	APPROVED BY:
PROJECTION	3K-KAMING	东莞市朗纶电子制品有限公司 Dongguan langlun electronic products Co., Ltd