| ALLOWANCE | |
|---|---|
| UNDER 3 | ± 0.1 |
| 3 TO 6 | ± 0.15 |
| 6 TO 15 | ± 0.2 |
| 15 TO 50 | ± 0.25 |
| 50 OVER | ± 0.3 |

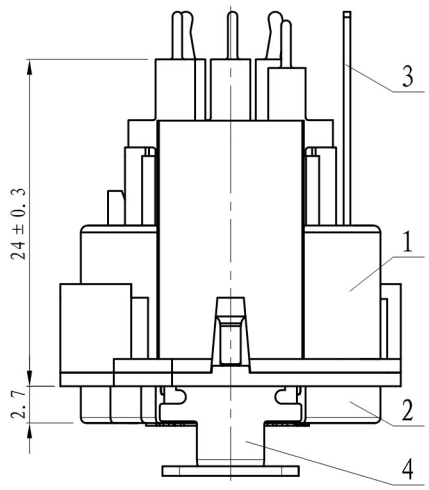


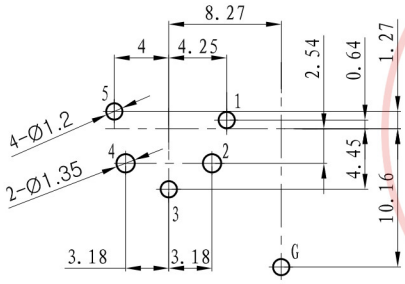


PCB LAYOUT
TOP VIEW

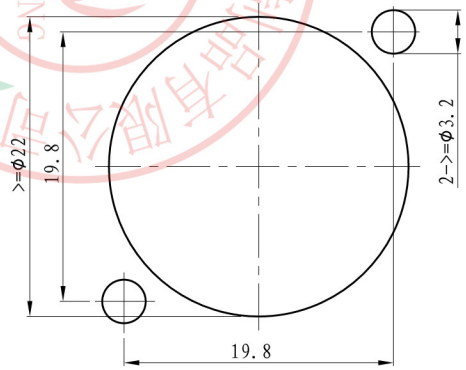


PANEL CUT OUT

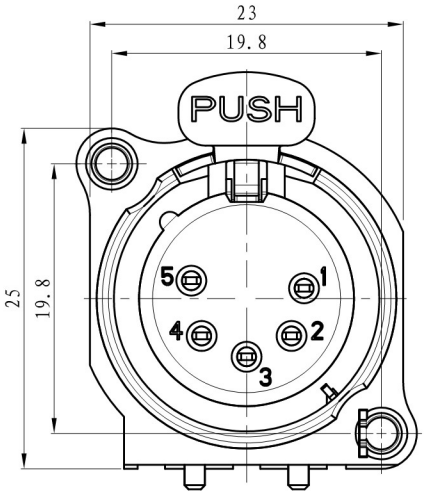


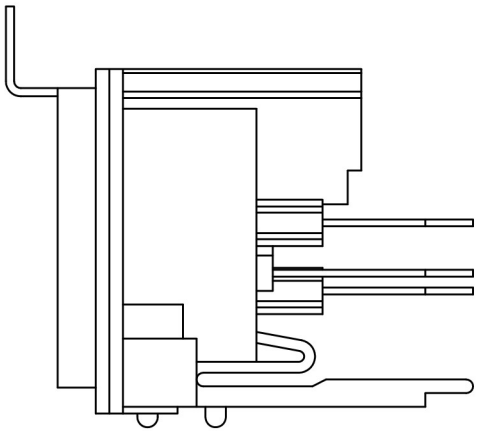

| NO: | PART NAME | MATERIAL | QTY | FINISHING |
|---|---|---|---|---|
| 7 | TERMINAL-C | BRONZE T=0.5 | 1 | Au PLATED |
| 6 | TERMINAL-B | BRONZE T=0.5 | 2 | Au PLATED |
| 5 | TERMINAL-A | BRONZE T=0.5 | 2 | Au PLATED |
| 4 | PUSH | SPCC T=0.65 | 1 | Ni PLATED |
| 3 | EARTHING | 65Mn T=0.5 | 1 | CuSn PLATED |
| 2 | COVER | PA66 | 1 | BLACK |
| 1 | HOUSE | PA66 | 1 | BLACK |

| | | |
|---|---|---|
| MODEL NO: SPF5-24D | ALLOWANCE: | DRAWN BY: LXL 2016-4-13 |
| TYPE: XLR CABLE CONNECTOR | UNIT: mm | CHECKED BY: WLW 2016-4-13 |
| MATERIAL NO: | SCALE: | APPROVED BY: HXQ 2016-4-13 |
| PROJECTION | 3K-KAMING | 东莞市朗纶电子制品有限公司<br>Dongguan langlun electronic products Co., Ltd |

东莞市朗纶电子制品有限公司
受控文件
东莞市朗纶电子制品有限公司
工程部