NO.	PARTCULR	BY	DATE
REVISIONS			

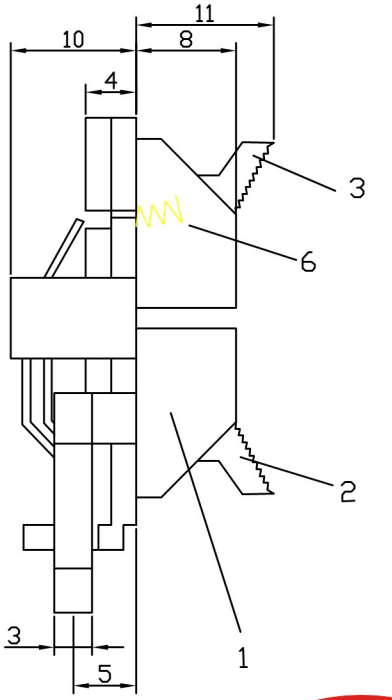

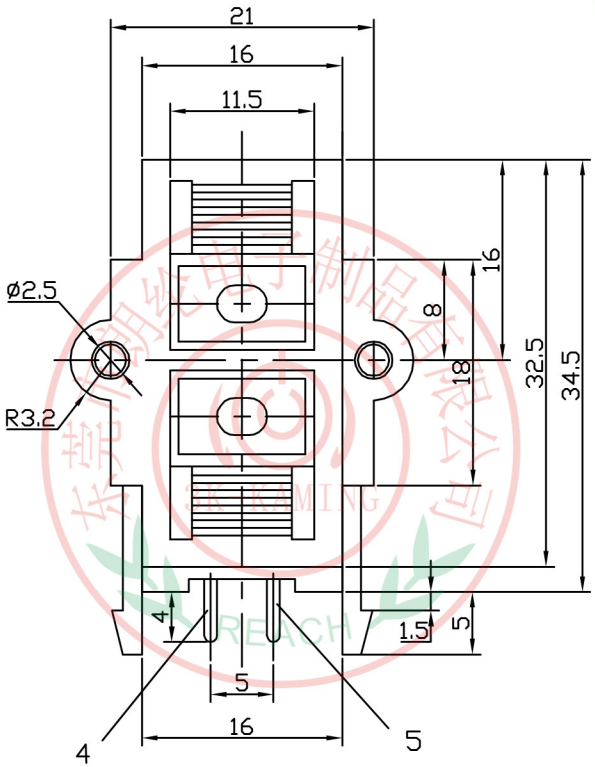

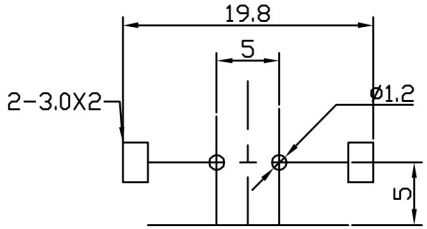

PCB LAYOUT

东莞市朗纶电子制品有限公司
工程部

东莞市朗纶电子制品有限公司
受控文件

NO:	PART NAME	MATERIAL	QTY	FINISHING
6	SPRING	SWC	2	
5	TERMINAL-2	H65-0.5Y	1	Cu-Sn PLATED
4	TERMINAL-1	H65-0.5Y	1	Cu-Sn PLATED
3	KNOB-2	PA-757	1	RED
2	KNOB-1	PA-757	1	BLACK
1	HOUSE	PA-757	1	BLACK

MODEL NO: WP2-6	TOLERANCE:±0.2	DRAWN BY: XIANG 2001.09.23
TYPE WP PUSH TREMINAL	UNIT: mm	CHECHED BY:
DRAEING NO: WP2-6-0	SCALE: NO SCALE	APPROVED BY:

3K-KAMING

东莞市朗纶电子制品有限公司
Dongguan langlun electronic products Co., Ltd