ALLOWANCE	
UNDER 3	± 0. 1
3 TO 6	± 0. 15
6 TO 15	± 0. 2
15 TO 50	± 0. 25
50 OVER	± 0. 3

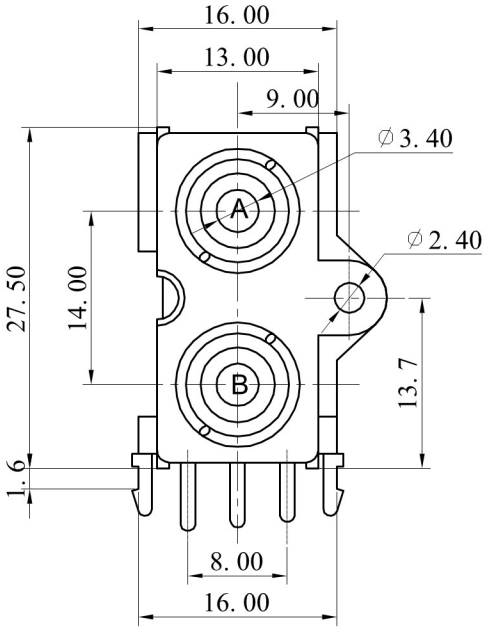

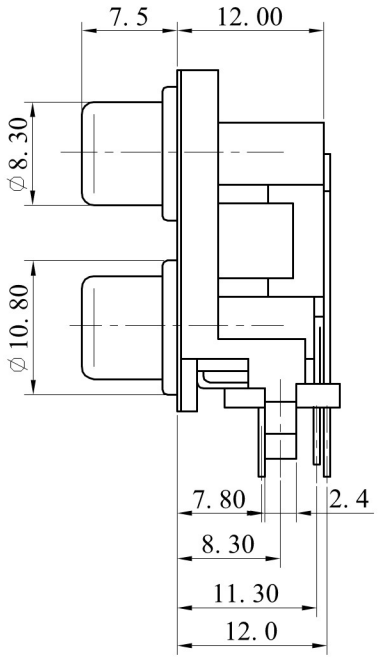

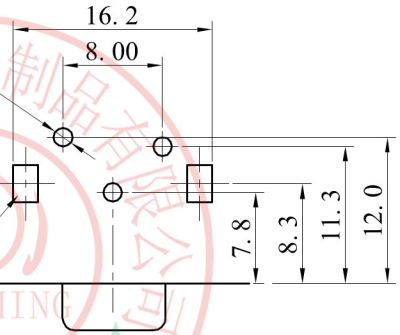

PCB LAYOUT
TOP VIEW

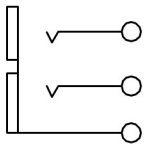

SCHEMATIC

东莞市朗纶电子制品有限公司
受控文件

东莞市朗纶电子制品有限公司
工程部

MODEL NO :RCA-209P	ALLOWANCE:	DRAWN BY:
TYPE: RCA JACK	UNIT: mm	CHECHED BY:
MATERIAL NO :50120908	SCALE:	APPROVED BY:
PROJECTION	3K-KAMING	东莞市朗纶电子制品有限公司 Dongguan langlun electronic products Co., Ltd