ALLOWANCE	
UNDER 3	± 0. 1
3 TO 6	± 0. 2
6 TO 15	± 0. 3
15 TO 50	± 0. 4
50 OVER	± 0. 5

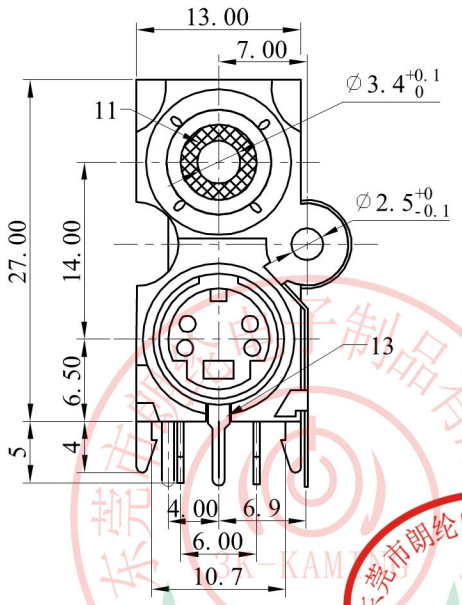

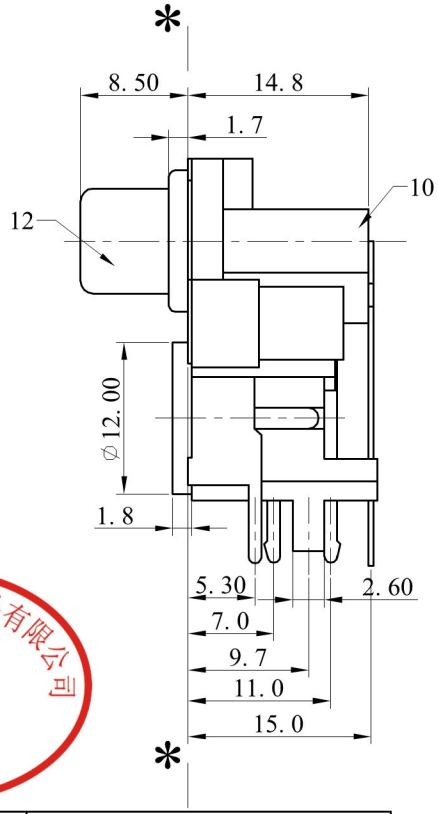

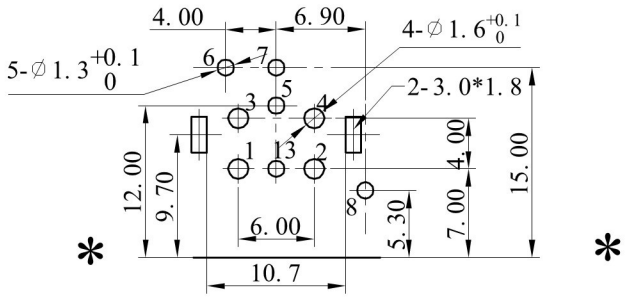

PCB LAYOUT

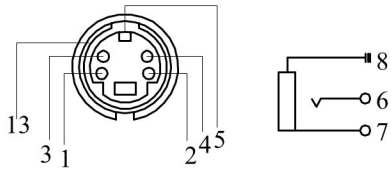

SCHEMATIC

NO.	PART NAME	MATERIAL	QTY	FINISHING
13	COVER	H65-0. 3	1	Cu-Sn PLATED
12	SOCKET	H65-0. 4M	1	Cu-Sn PLATED
11	WASHER	PBT-G30 (VIRGIN)	1	YELLOW
10	HOUSE	PBT-G30 (VIRGIN)	1	BLACK
9	COVER-P	H65-0. 3M	1	Cu-Sn PLATED
8	TERMINAL-H	H65-0. 3Y	1	Cu-Sn PLATED
7	TERMINAL-G	H65-0. 3Y	1	Cu-Sn PLATED
6	TERMINAL-F	H65-0. 5Y	1	Cu-Sn PLATED
5	TERMINAL-E	QSn6. 5-0. 1-0. 3Y	1	Cu-Sn PLATED
4	TERMINAL-D	QSn6. 5-0. 1-0. 4Y	1	Ag PLATED
3	TERMINAL-C	QSn6. 5-0. 1-0. 4Y	1	Ag PLATED
2	TERMINAL-B	QSn6. 5-0. 1-0. 4Y	1	Ag PLATED
1	TERMINAL-A	QSn6. 5-0. 1-0. 4Y	1	Ag PLATED

MODEL NO : RWD02	TOLERANCE: ± 0. 2	DRAWN BY:
TYPE :RCA PIN JACK DOARD	UNIT: mm	CHECHED BY:
DRAWING NO :	SCALE: NO SCALE	APPROVED BY:

3K-KAMING

东莞市朗纶电子制品有限公司
Dongguan langlun electronic products Co., Ltd

东莞市朗纶电子制品有限公司 受控文件
东莞市朗纶电子制品有限公司 工程部
3K-KAMING REACH