ALLOWANCE	
UNDER 3	±0.1
3 TO 6	±0.15
6 TO 15	±0.2
15 TO 50	±0.25
50 OVER	±0.3

东莞市朗纶电子制品有限公司
受控文件

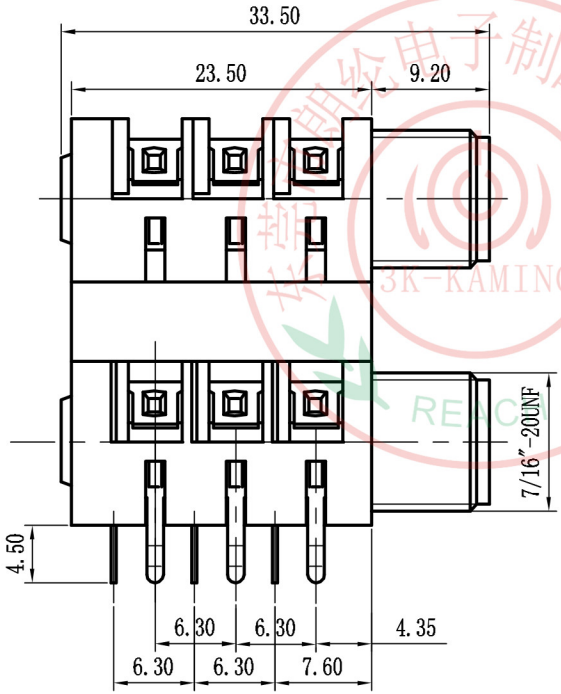

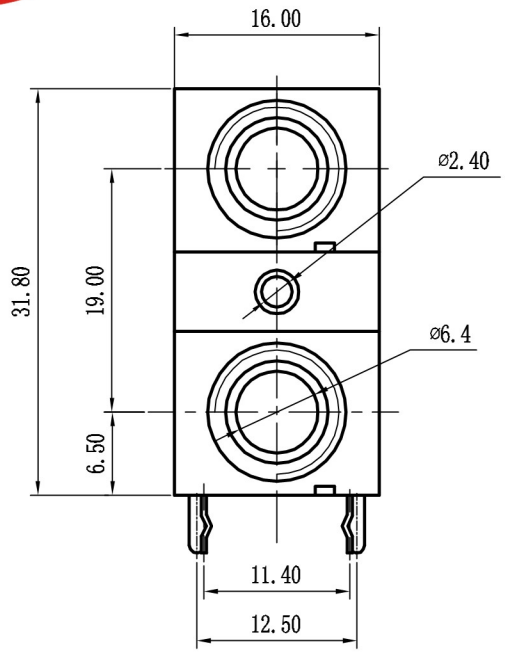

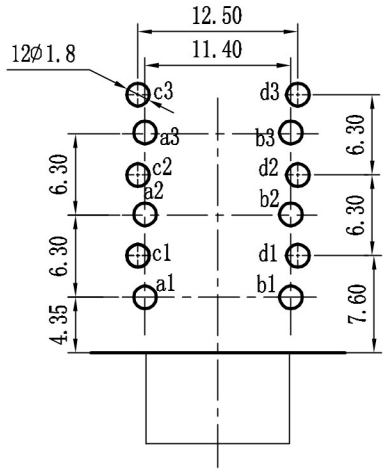

PCB LAYOUT

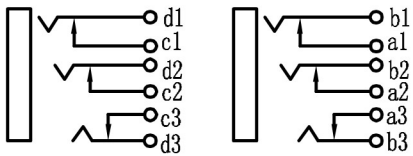

SCHEMATIC

东莞市朗纶电子制品有限公司
工程部

MODEL NO: SJ-6357D-2B	ALLOWANCE:	DRAWN BY:
TYPE: 6.35 PHONE JACK	UNIT: mm	CHECKED BY:
MATERIAL NO:	SCALE:	APPROVED BY:
PROJECTION	3K-KAMING	东莞市朗纶电子制品有限公司 Dongguan langlun electronic products Co., Ltd