Pb Process Capable

RoHS Compliant 2002/95/EC

REV.	ECN. NO.	APPD.

DIMENSIONS

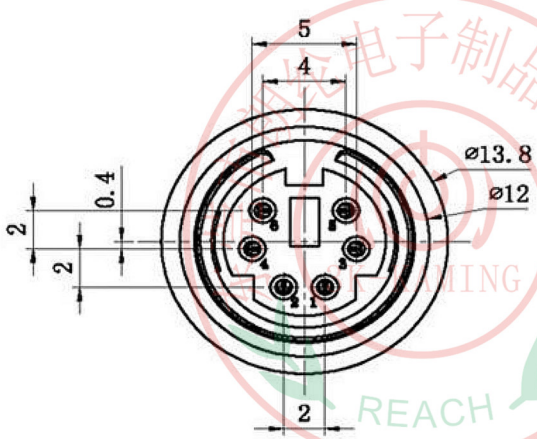

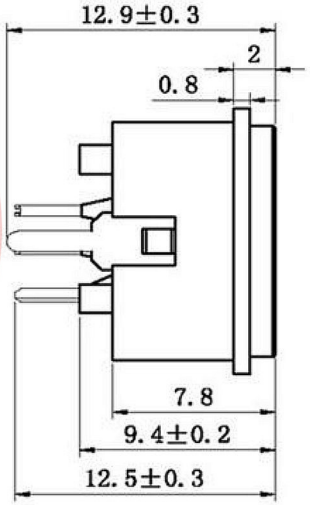

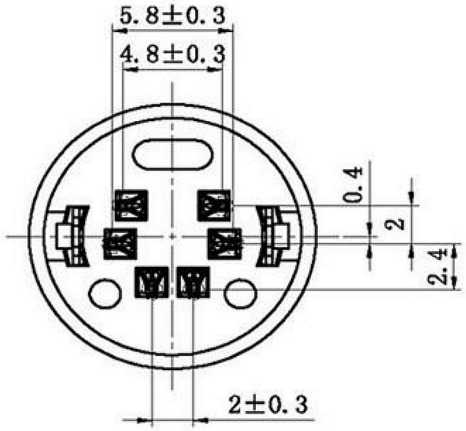

东莞市朗纶电子制品有限公司 工程部

PCB板安装孔图

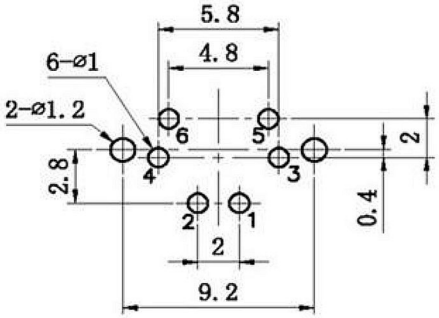

东莞市朗纶电子制品有限公司 受控文件

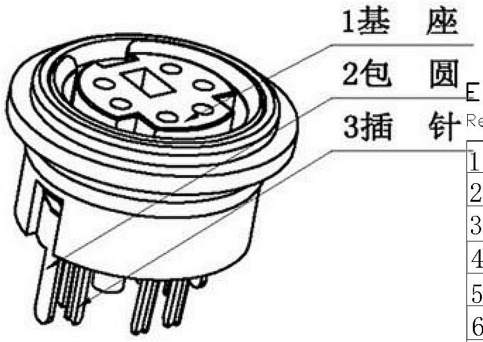

ELECTRO-MECHANICAL CHARACTERISTICS

Refer to additional specifications

1	额定负荷Rated laod	12V 0.5A DC
2	接触电阻Contact resistance	≤30m Ω
3	绝缘电阻Insulation resistance	≥100MΩ
4	耐压Witstand Voltage	AC 250V(50HZ) /1min
5	电器寿命Life	≥ 5000 cycle
6	动作力度Strength of action	5-50N You can customize it
7	环境温度The environment temperature	-15～75℃
8	相对湿度Relative humidity	≤95％ (40℃)
9		
10		
11		

NO	配件Accessories	材料名称Material	产地Place of origin	备注Note
1	上盖/基座Topcover/base	PBT	进口/国产Imports / domestic	黑/白Black/white
2	塑胶内件interior	PBT	进口/国产Imports / domestic	黑/白Black/white
3	端子/拉伸件Terminals/stretchers	H62黄铜Brass	进口/国产Imports / domestic	CU/NI/SN
4	短针Short needle	H62黄铜Brass	进口/国产Imports / domestic	CU/NI/SN
5	中针 Middle Needle	H62黄铜Brass	进口/国产Imports / domestic	CU/NI/SN
6	长针Long needle	H62黄铜 Brass	进口/国产Imports / domestic	CU/NI/SN

WITHIN 1.5mm: ±0.1mm
OVER 1.5mm: ±0.2mm

THESE DRAWINGS AND SPECIFICATIONS ARE THE PROPERTY OF ACCURATE 3K-KAMING(LANG LUN) INC,AND SHALL NOT BE REPRODUCED,COPIED OR USED IN ANY MANNER WITHOUT THE PRIOR WRITTEN CONSENT OF ACCURATE 3K-KAMING(LANG LUN) INC.

UNITS mm
MAT'L SEE NOTE
FINISH SEE NOTE
Q'TY

3K-KAMING 东莞市朗纶电子制品有限公司 Dongguan langlun electronic products Co., Ltd

TITLE: PUSH SWITCH / VERTICAL
PART NO.: 3K-6-04A
DR: Ricky 2015/03/23
DWG NO.: 3K-6-04A
CHKD: Ricky 2015/03/23
APPD:

SCALE	SHEET	REV.	CUSTOMER DRAWING
4:1	1/1	A	