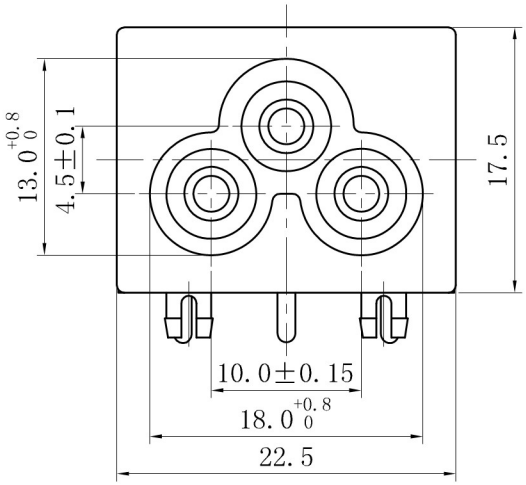

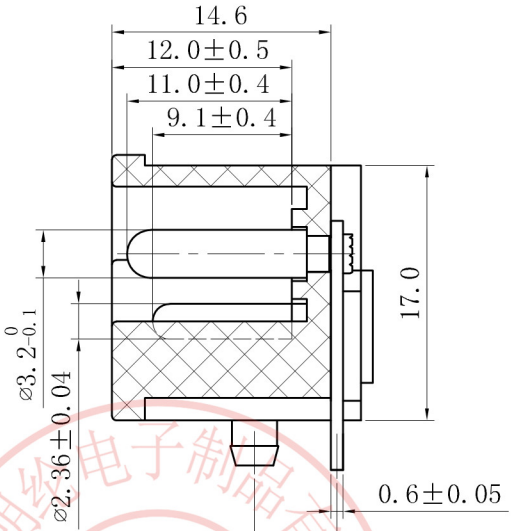

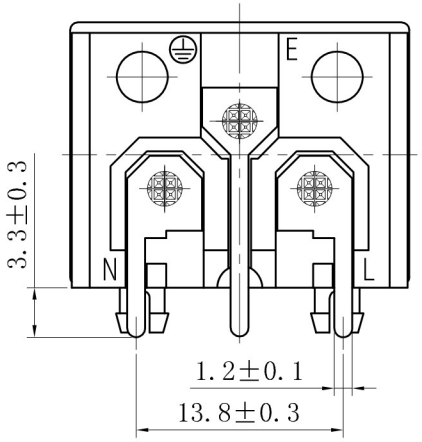

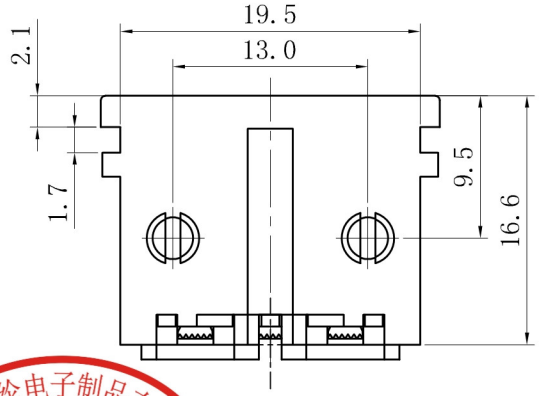

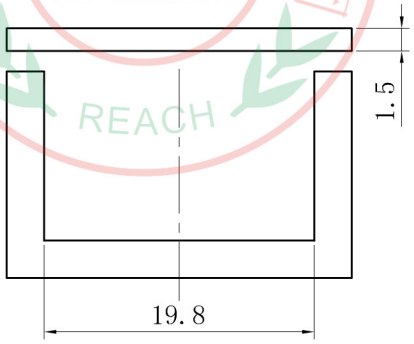

PANEL CUT-OUT

Rating :
5A 250V AC T105 UL cUL
2.5A 250V AC VDE 3C KC

Insert And Extract Force: 1.36kgf~6.8kgf

Terminal Strength: ≥80N

Operating Life: ≥5000 cycles

Withstand Voltage: Between all terminals:2500VAC（50-60Hz)1min
terminals to Base:3750V AC（50-60Hz)1min
Leakage Current : 1mA

Insulation Resistance: ≥100MΩ 500V DC

东莞市朗纶电子制品有限公司
受控文件
东莞市朗纶电子制品有限公司
工程部
3K-KAMING
REACH

A4			
A3			
A2			
A1			
REV.	DATE	REVISION DESCRIPTION	ISSUE

普通公差 COMMON TOLERANCE :	
UP TO 5	±0.20
ABOVE 5 TO 30	±0.30
ABOVE 30	±0.50
ANGULAR	±5°

3K-KAMING ®

东莞市朗纶电子制品有限公司
Dongguan langlun electronic products Co., Ltd

单位 UNIT	mm	投影 PROJECTED		品名 PRODUCT NAME	Ac Inlet C6型	比例 SCALE	Free
绘图 DRAWN BY	吴瑜	核对 CHECKED BY		型号 MODEL NO.	3K-6-1P4P3		
日期 DATE	2012.10.16	核准 APPROVAL BY		图号 DWG NO.	61P4P3		